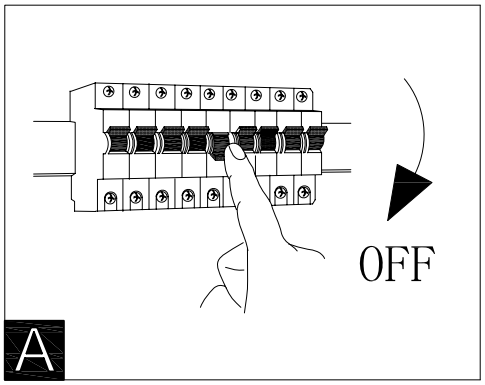
OFF
A

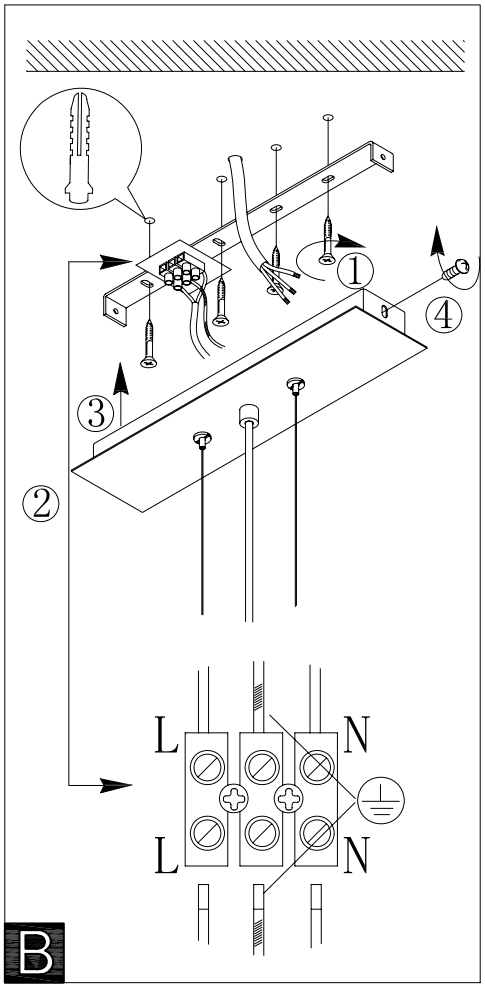
①
②
③
④
L
N
L
N
B

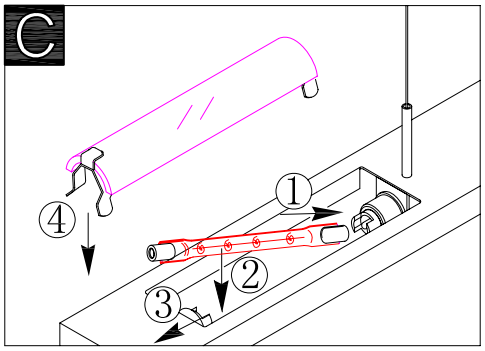
C
①
②
③
④

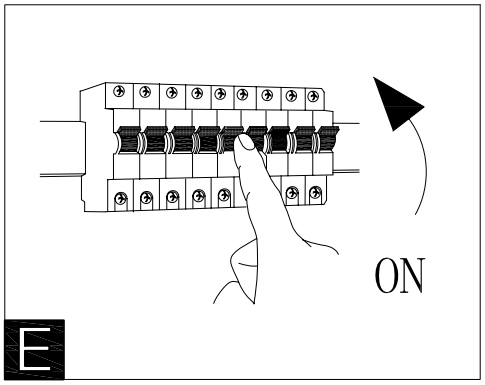
ON
E

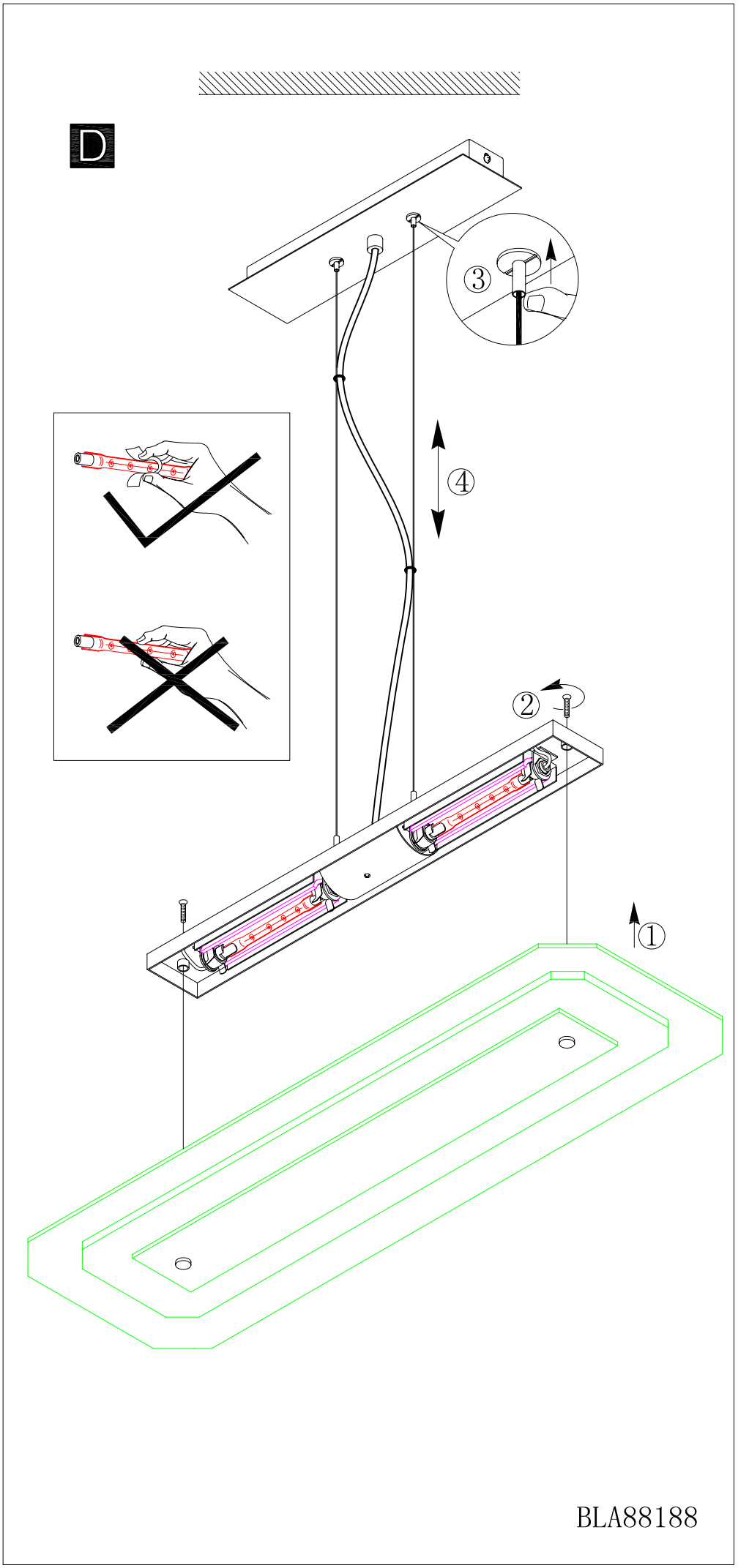
D
①
②
③
④
BLA88188